LEROS

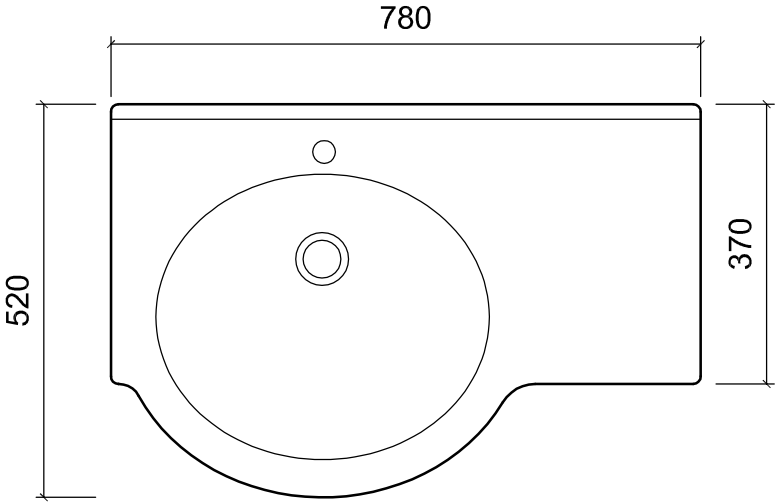

LEROS L/H
Code: 26501

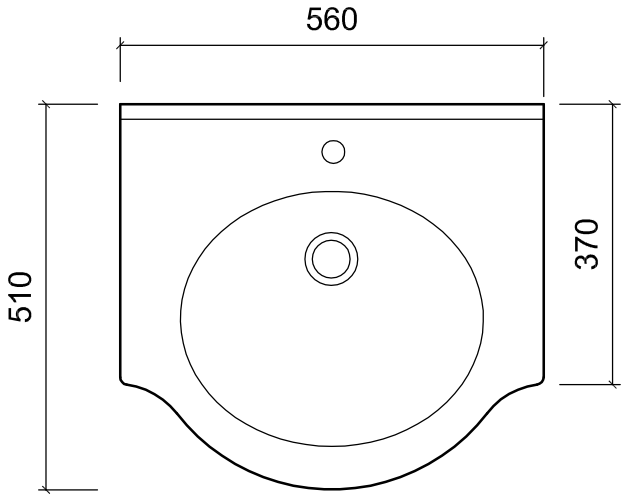

LEROS Small
Code: 26401

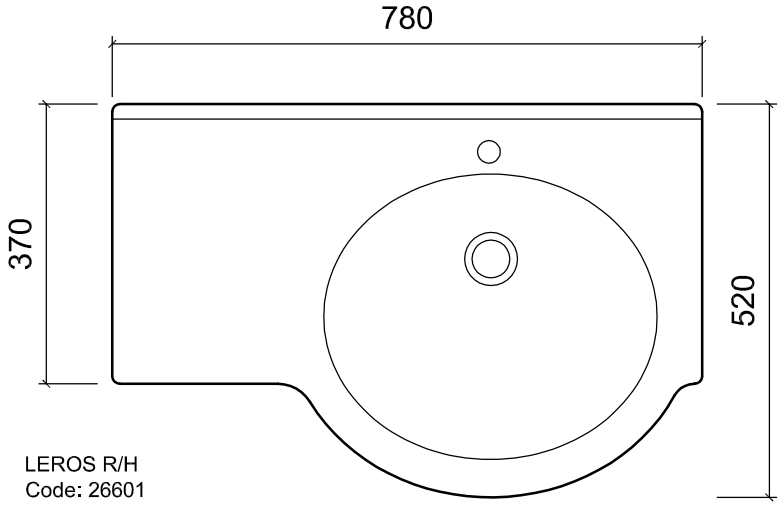

LEROS R/H
Code: 26601

COMPANY

st.michel BATHROOMWARE

Contact:

2 Enterprise Drive (off Corban Avenue),
Henderson,
Auckland,
NEW ZEALAND

Phone: 64 (9) 837-4276

Fax: 64 (9) 837-4325

Email: info@stmichel.co.nz

Website: www.stmichel.co.nz

Drawing Title:

LEROS_26401
LEROS_L/H_26501
LEROS_R/H_26601

Note:

Xrefs Attached:	File Name: LEROS.DWG	Scale at A4: 1:10
	Date Drawn: March 2008	Job No:
	Drawn By: NG	Revision: A